ROBUS®

QUALITY PRODUCTS BY LED GROUP

# DUKE 40W LED BATTEN, IP20, 1.2M, CCT3 SELECTABLE (3000K/4000K/6500K), DUAL POWER, 3 STEP DIMMING, WHITE

## RDK4012CCT3DPE-01

**PLEASE READ INSTRUCTION BEFORE COMMENCING INSTALLATION AND RETAIN FOR FUTURE REFERENCES.**
**! Electrical products can cause death or injury, or damage to property. If in any doubt about the installation or use of this product, consult a competent electrician**

**Note:**
**Product technical information and specification may change over time without prior notification. For the latest technical information please visit our web site www.ledgrouprobus.com.au**

0°C < Ta < +40°C, 220-240V ~ 50/60Hz, Class I, IP20.
Suitable for mounting on a normally flammable surface.
Default Settings:
Sensitivity: 100%, Lux: 50 Lux, Hold Time: 5 Minutes, Dimming Level: 20%, Standby Time: 60 Mins
Use hand held remote to adjust sensor controls (R360RC-01: Dual Power Remote Control)

## Installation

1. Ensure mains supply is switched off before commencing work.
2. Safety note! The power supply cord must not be exposed to mechanical damage.
3. Remove screws. At the end cap pull LED section away from the base. If need insert a flat head screw driver between LED section and the base
4. Mark appropriate fixing position on the ceiling or wall, Before drilling establish the direction of buried cables and other building services.
5. Drill holes in the ceiling and attach the base to the ceiling or wall.
7. Introduce supply cables.
8. Write installation date on battery and connect battery.
9. Connect wires from un-switched supply to terminals: Brown/Live to PL, Blue/ Neutral to N and Green/Yellow to earth. For fitting always on, link terminal “SL” to terminal “PL”. When controlled by switch connect switched live wire to terminal SL and permanent live to PL. Note: if “SL” terminal not connected, fitting works as non-maintained.
10. Move switch on metal plate to select colour temperature: 3000K, 4000K or 6500K

**WARNING: DO NOT CHANGE CCT WHEN THE FITTING IS ON!!**

11. Attach LED section to base, insert screws and ensure that it is secure.

Switch on supply: The green LED should come on indicating correct battery charge status. When supply to permanent live PL is lost, battery will operate fitting in emergency mode. Interrupt supply by pressing the test switch, the fitting will then operate in emergency mode for a short period of time.
Note: This luminaire has no user serviceable parts. If damaged, disconnect from mains and discontinue use.

## Microwave sensor

R360RC-01:
Hold Time: 10 Sec, 1 Min, 5 Mins, 15 Mins, 30 Mins, 60 Mins
Dimming: 0%, 10%, 20% & 30%
Sensitivity: 10%, 50%, 75% & 100%
Standby Time: 24 Hours, 1 Min, 30 Mins, 60 Mins
Height of mounting: 2.5m-3.5m, Detection range: Max. radius 8m.

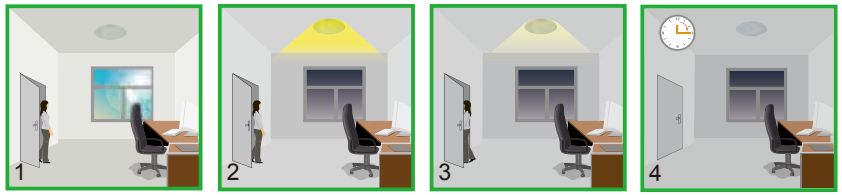


1. With sufficient natural light. the fitting will not switch on when movement is detected ( Default : Lux control is 50 Lux ).
2. When sensor detects movement and there is insufficient natural light, the fitting will switch on (100% brightness).
3. After activation and no movement detected the fitting goes into Hold Time Period (Default 5 Mins). When Hold Time has Elapsed the fitting enters Standby Time Period (Default 20% Output, 60 Mins).
4. The fitting will switch off after Standby Period has elapsed.

**The Installation must be carried out by a qualified electrician**


LED Group Australasia
9/210 Queensport Road North
Murarrie
QLD 4172
Australia

Tel: 07 3890 5444
Fax: 07 3890 4777
Email: purchases@ledgrouprobus.com.au
Website: www.ledgrouprobus.com.au


Issue 1 110918

The emergency lighting must be inspected and tested regularly in accordance with local codes of practice: note: for safety reasons tests should be carried out during daylight hours. The minimum recommended test schedule is as follows: After installation, allow 16 hours to ensure full battery charge and then interrupt the supply; the maximum duration time is 90-minutes check that LEDs are still lighting.

1. Daily check that charge indicator LED is working.
2. Monthly, interrupt mains for a short period and check LED lights
3. 6-month and 12-month check, full duration test. Interrupt mains supply, LEDs will light and should last for a minimum 90-minutes operation: batteries must be replaced when they can no longer support 90-minutes operation.
4. Complete record sheet on installation and retain in maintenance file.
5. Update file with ongoing test records for inspection by fire officer or other duly authorised person.

**Installation and Maintenance Record:**

Installer _____

Installation Type _____

Installation test duration & Date _____

| Month | Test | 1st Year | | 2nd Year | | 3rd Year | | 4th Year | | 5th Year | |
|---|---|---|---|---|---|---|---|---|---|---|---|
| | | Signed | Date | Signed | Date | Signed | Date | Signed | Date | Signed | Date |
| 1 | Short | | | | | | | | | | |
| 2 | Short | | | | | | | | | | |
| 3 | Short | | | | | | | | | | |
| 4 | Short | | | | | | | | | | |
| 5 | Short | | | | | | | | | | |
| 6 | Short | | | | | | | | | | |
| | 90 min. | | | | | | | | | | |
| 7 | Short | | | | | | | | | | |
| 8 | Short | | | | | | | | | | |
| 9 | Short | | | | | | | | | | |
| 10 | Short | | | | | | | | | | |
| 11 | Short | | | | | | | | | | |
| 12 | Short | | | | | | | | | | |
| | 90 min. | | | | | | | | | | |

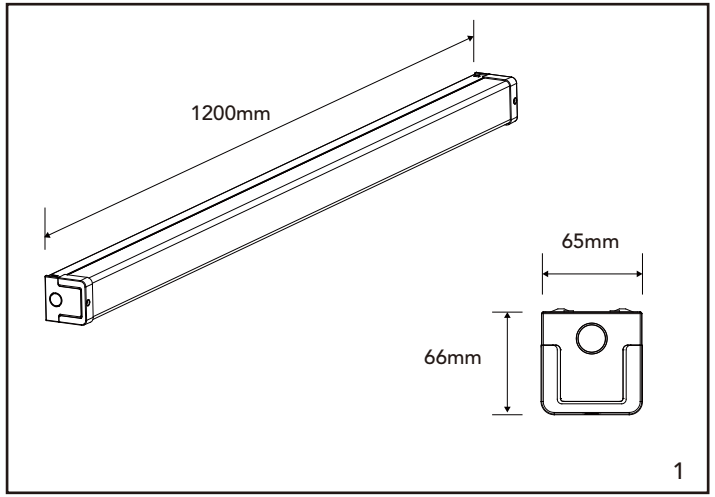
1200mm
65mm
66mm
1

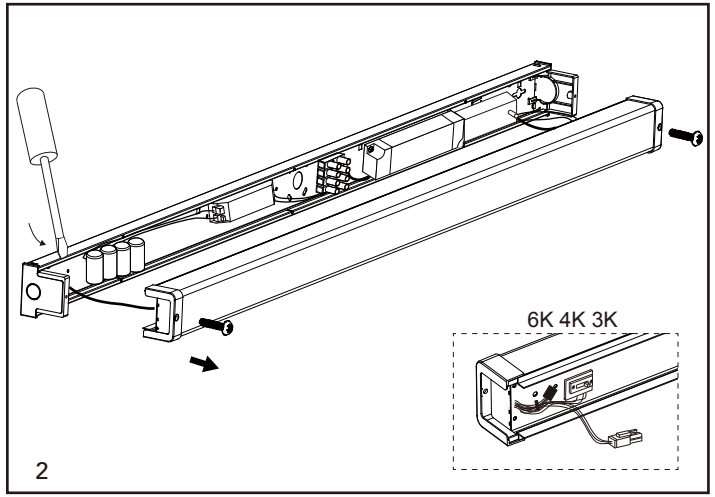
6K 4K 3K
2

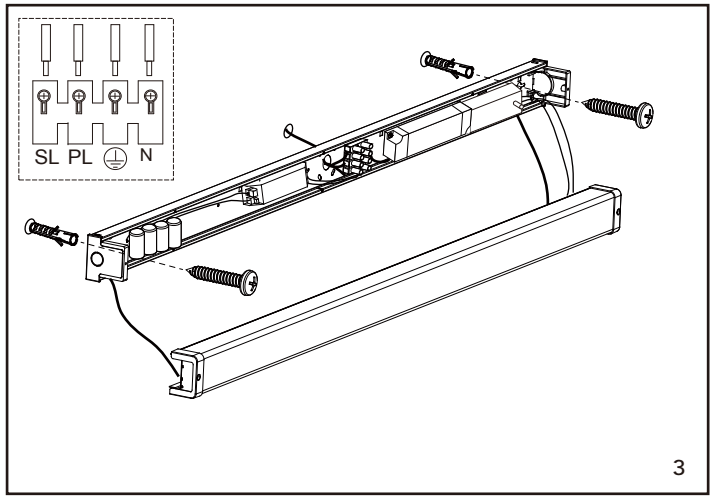
SL PL N
3

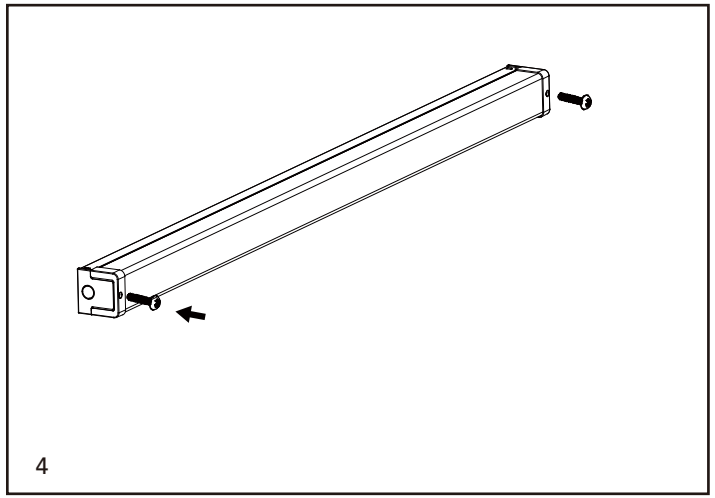
4